Work Order ID 71385

Thursday, June 30, 2011 11:40:43 AM

Item ID: D350-591-113
Revision ID:
Item Name: Heli-Access-Step, Short

Accept

Setup Start
Stop

Start Date: 6/30/2011 **Start Qty:** 10.00
Required Date: 7/5/2011 **Req'd Qty:** 10.00
Reference:

Cust Item ID:
Customer:

Approvals: **Process Plan:** _____ **Date:** 11-06-30 **Tooling:** _____ **Date:** _____
QC: _____ **Date:** _____ **SPC (Y/N):** _____ **Date:** _____

Run Start
Stop

Sequence ID/ Work Center ID	Operation Description	Set Up/ Run Hours	Tool ID	Tool #	Plan Code	Accept Qty	Reject Qty	Reject Number	Insp. Stamp

Draw Nbr	Revision Nbr
D2310	D
DSI 9525	A

100 — 0.00

DC — DOCUMENT CONTROL

Document Control

Memo — 0.00

Photocopy bluefile & type labels per PPP D350-591-113 CHG005

8 11/08/12

CK BG 11/08/11

110 — 0.00

Large Fab — Large Fab

Large Fab

Memo — 0.00

1-Cut D2244 extrusion to 62.00" long as per Dwg D2310
2-Drill extrusion as per Dwg D2310 using drill Jig DT8230
3-Deburr

11.07.11

11/07/14

x10 Ø

Dart Aerospace Ltd

W/O:		WORK ORDER CHANGES					
DATE	STEP	PROCEDURE CHANGE	By	Date	Qty	Approval Chief Eng / Prod Mgr	Approval QC Inspector

Part No: _____ **PAR #:** _____ **Fault Category:** _____ **NCR:** Yes No **DQA:** _____ **Date:** _____

Resolution: _____ **Disposition:** _____ **QA: N/C Closed:** _____ **Date:** _____

NCR:		WORK ORDER NON-CONFORMANCE (NCR)						
DATE	STEP	Description of NC Section A	Corrective Action Section B			Verification Section C	Approval Chief Eng	Approval QC Inspector
			Initial Chief Eng	Action Description Chief Eng	Sign & Date			

NOTE: Date & initial all entries

Work Order ID 71385

Thursday, June 30, 2011 11:40:43 AM

Item ID: D350-591-113
Revision ID:
Item Name: Heli-Access-Step, Short

Accept ____ **Setup** **Start** **Stop**

Start Date: 6/30/2011 **Start Qty:** 10.00
Required Date: 7/5/2011 **Req'd Qty:** 10.00
Reference:

Cust Item ID:
Customer:

Approvals: **Process Plan:** _____ **Date:** _____ **Tooling:** _____ **Date:** _____
QC: _____ **Date:** _____ **SPC (Y/N):** _____ **Date:** _____

Run **Start** **Stop**

Sequence ID/ Work Center ID	Operation Description	Set Up/ Run Hours	Tool ID	Tool #	Plan Code	Accept Qty	Reject Qty	Reject Number	Insp. Stamp
120 QC Quality Control	~~QC5~~ QC 6 - Inspect part completeness to step on W/O	0.00							11 07 14 (10) P.T.O
	Memo	0.00							
130 Large Fab Large Fab	Large Fab	0.00							
	Memo M117884 1-Weld Fwd end cap and bushing as per Dwg D2310 A/R AL ROD Batch: M114703 2-Grind end cap and bottom bushing welds flush 3-Machine top weld on bushing flush	0.00				10	0		11/07/14 11.07.18.
140 QC Quality Control	QC9- Inspect visual per QSI004- Fusion Welds	0.00				10	0		11/07/19
	Memo	0.00							

Dart Aerospace Ltd

W/O:		WORK ORDER CHANGES					
DATE	STEP	PROCEDURE CHANGE	By	Date	Qty	Approval Chief Eng / Prod Mgr	Approval QC Inspector
11.07.14	120	~~QC6 inspect part~~ CHANGE TO QC6	[illegible]	11.07.14			[illegible] 11/07/14
		SUP					

Part No: _____ PAR #: _____ Fault Category: _____ NCR: Yes No DQA: _____ Date: _____

Resolution: _____ Disposition: _____ QA: N/C Closed: _____ Date: _____

NCR:		WORK ORDER NON-CONFORMANCE (NCR)						
DATE	STEP	Description of NC Section A	Corrective Action Section B			Verification Section C	Approval Chief Eng	Approval QC Inspector
			Initial Chief Eng	Action Description Chief Eng	Sign & Date			

NOTE: Date & initial all entries

H:\fFORMS\Quality Assurance\approved QA\NCRWO RevE

Work Order ID 71385

Thursday, June 30, 2011 11:40:43 AM

Item ID: D350-591-113 **Accept** **Setup Start** **Stop**

Revision ID:

Item Name: Heli-Access-Step, Short

Start Date: 6/30/2011 **Start Qty:** 10.00 **Cust Item ID:**

Required Date: 7/5/2011 **Req'd Qty:** 10.00 **Customer:**

Reference:

Run Start **Stop**

Approvals: **Process Plan:** _____ **Date:** _____ **Tooling:** _____ **Date:** _____

QC: _____ **Date:** _____ **SPC (Y/N):** _____ **Date:** _____

Sequence ID/ Work Center ID	Operation Description	Set Up/ Run Hours	Tool ID	Tool #	Plan Code	Accept Qty	Reject Qty	Reject Number	Insp. Stamp
150	QC5- Inspect part completeness to step on W/O	0.00				~~10~~			
QC	Memo	0.00							
Quality Control									
160	Chemical Conversion Coat per QSI005 4.1	0.00				x10	ø		
HandFinish	Memo	0.00							
Hand Finishing									
170		0.00							
Large Fab	Large Fab					10	ø		
Large Fab	Memo	0.00							

1-Rivet as per Dwg D2310
2-Inspect for foreign object as per QSI 024
3-Weld Aft end cap as per Dwg D2310
A/R AL ROD Batch: 114703
4-Grind end cap welds flush

11-07-19.

11-08-10

Dart Aerospace Ltd

W/O:		WORK ORDER CHANGES					
DATE	STEP	PROCEDURE CHANGE	By	Date	Qty	Approval Chief Eng / Prod Mgr	Approval QC Inspector

Part No: _____ **PAR #:** _____ **Fault Category:** _____ **NCR:** Yes No **DQA:** _____ **Date:** _____

Resolution: _____ **Disposition:** _____ **QA: N/C Closed:** _____ **Date:** _____

NCR:		WORK ORDER NON-CONFORMANCE (NCR)						
DATE	STEP	Description of NC Section A	Corrective Action Section B			Verification Section C	Approval Chief Eng	Approval QC Inspector
			Initial Chief Eng	Action Description Chief Eng	Sign & Date			

NOTE: Date & initial all entries

H:\fFORMS\Quality Assurance\approved QA\NCRWO RevE

Work Order ID 71385

Thursday, June 30, 2011 11:40:43 AM

Item ID: D350-591-113 **Accept** **Setup Start** **Stop**

Revision ID:

Item Name: Heli-Access-Step, Short

Start Date: 6/30/2011 **Start Qty:** 10.00 **Cust Item ID:**

Required Date: 7/5/2011 **Req'd Qty:** 10.00 **Customer:**

Reference:

Run Start **Stop**

Approvals: **Process Plan:** _____ **Date:** _____ **Tooling:** _____ **Date:** _____

QC: _____ **Date:** _____ **SPC (Y/N):** _____ **Date:** _____

Sequence ID/ Work Center ID	Operation Description	Set Up/ Run Hours	Tool ID	Tool #	Plan Code	Accept Qty	Reject Qty	Reject Number	Insp. Stamp
180	QC10- Inspect visual per QSI004- ground welds	0.00							
QC	Memo	0.00							
Quality Control									
190	QC5- Inspect part completeness to step on W/O	0.00				10			
QC	Memo	0.00							
Quality Control									
200	Chemical Conversion Coat per QSI005 4.1	0.00							
HandFinish	Memo	0.00							
Hand Finishing									

10X 07/08/11

Dart Aerospace Ltd

W/O:		WORK ORDER CHANGES					
DATE	STEP	PROCEDURE CHANGE	By	Date	Qty	Approval Chief Eng / Prod Mgr	Approval QC Inspector

Part No: _____ **PAR #:** _____ **Fault Category:** _____ **NCR:** Yes No **DQA:** _____ **Date:** _____

Resolution: _____ **Disposition:** _____ **QA: N/C Closed:** _____ **Date:** _____

NCR:		WORK ORDER NON-CONFORMANCE (NCR)						
DATE	STEP	Description of NC Section A	Corrective Action Section B			Verification Section C	Approval Chief Eng	Approval QC Inspector
			Initial Chief Eng	Action Description Chief Eng	Sign & Date			

NOTE: Date & initial all entries

H:\fFORMS\Quality Assurance\approved QA\NCRWO RevE

Work Order ID 71385

Thursday, June 30, 2011 11:40:43 AM

Item ID: D350-591-113 **Accept** **Setup Start** **Stop**

Revision ID:

Item Name: Heli-Access-Step, Short

Start Date: 6/30/2011 **Start Qty:** 10.00 **Cust Item ID:**

Required Date: 7/5/2011 **Req'd Qty:** 10.00 **Customer:**

Reference:

Run Start **Stop**

Approvals: **Process Plan:** _____ **Date:** _____ **Tooling:** _____ **Date:** _____

QC: _____ **Date:** _____ **SPC (Y/N):** _____ **Date:** _____

Sequence ID/ Work Center ID	Operation Description	Set Up/ Run Hours	Tool ID	Tool #	Plan Code	Accept Qty	Reject Qty	Reject Number	Insp. Stamp
210	White Gloss(Ref:4.3.5.1) per QSI005 4.3-Alum	0.00							
Powdercoat	M118349					10	0	M	11/08/12
	Memo	0.00							
Powder Coating	START TIME: 11:00am OVEN TEMPERATURE: 320°F FINISH TIME: 1:30pm								
220	Wing Walk as per dwg QSI005 4.4 Batch M 118313	0.00				10	0	M	11/08/12
HandFinish	**Memo**	0.00							
Hand Finishing									
230	QC3- Inspect Part Finish	0.00							
QC	**Memo**	0.00	S 11/08/12			10			
Quality Control									

Dart Aerospace Ltd

W/O:		WORK ORDER CHANGES					
DATE	STEP	PROCEDURE CHANGE	By	Date	Qty	Approval Chief Eng / Prod Mgr	Approval QC Inspector

Part No: _____ **PAR #:** _____ **Fault Category:** _____ **NCR:** Yes No **DQA:** _____ **Date:** _____

Resolution: _____ **Disposition:** _____ **QA: N/C Closed:** _____ **Date:** _____

NCR:		WORK ORDER NON-CONFORMANCE (NCR)						
DATE	STEP	Description of NC Section A	Corrective Action Section B			Verification Section C	Approval Chief Eng	Approval QC Inspector
			Initial Chief Eng	Action Description Chief Eng	Sign & Date			

NOTE: Date & initial all entries

H:\fFORMS\Quality Assurance\approved QA\NCRWO RevE

Work Order ID 71385

Thursday, June 30, 2011 11:40:43 AM

Item ID: D350-591-113 **Accept** **Setup Start**

Revision ID: **Stop**

Item Name: Heli-Access-Step, Short

Start Date: 6/30/2011 **Start Qty:** 10.00 **Cust Item ID:**

Required Date: 7/5/2011 **Req'd Qty:** 10.00 **Customer:**

Reference:

Run Start

Approvals: **Process Plan:** _____ **Date:** _____ **Tooling:** _____ **Date:** _____

Stop

QC: _____ **Date:** _____ **SPC (Y/N):** _____ **Date:** _____

Sequence ID/ Work Center ID	Operation Description	Set Up/ Run Hours	Tool ID	Tool #	Plan Code	Accept Qty	Reject Qty	Reject Number	Insp. Stamp
240	Pick Kit	0.00							
Packaging	**Memo**	0.00							
Packaging									
250	QC4- 100% Inspect kits for completeness	0.00							
QC	**Memo**	0.00							
Quality Control									
260	PACKAGING RESOURCE #1	0.00							
Packaging	**Memo**	0.00							
Packaging	Identify and pack for shipping as per PPP D350-591-113 Location:_____								

Dart Aerospace Ltd

W/O:		WORK ORDER CHANGES					
DATE	STEP	PROCEDURE CHANGE	By	Date	Qty	Approval Chief Eng / Prod Mgr	Approval QC Inspector

Part No: _____ **PAR #:** _____ **Fault Category:** _____ **NCR:** Yes No **DQA:** _____ **Date:** _____

Resolution: _____ **Disposition:** _____ **QA: N/C Closed:** _____ **Date:** _____

NCR:		WORK ORDER NON-CONFORMANCE (NCR)						
DATE	STEP	Description of NC Section A	Corrective Action Section B			Verification Section C	Approval Chief Eng	Approval QC Inspector
			Initial Chief Eng	Action Description Chief Eng	Sign & Date			

NOTE: Date & initial all entries

Work Order ID 71385

Thursday, June 30, 2011 11:40:43 AM

Item ID: D350-591-113 **Accept** **Setup Start**

Revision ID: **Stop**

Item Name: Heli-Access-Step, Short

Start Date: 6/30/2011 **Start Qty:** 10.00 **Cust Item ID:**

Required Date: 7/5/2011 **Req'd Qty:** 10.00 **Customer:**

Reference:

Run Start

Approvals: **Process Plan:** _____ **Date:** _____ **Tooling:** _____ **Date:** _____

Stop

QC: _____ **Date:** _____ **SPC (Y/N):** _____ **Date:** _____

Sequence ID/ Work Center ID	Operation Description	Set Up/ Run Hours	Tool ID	Tool #	Plan Code	Accept Qty	Reject Qty	Reject Number	Insp. Stamp
270	QC21- Final Inspection - Work Order Release	0.00							
QC	**Memo**	0.00							
Quality Control									

CK 11/08/12

CMF 11-08-12

Dart Aerospace Ltd

W/O:		WORK ORDER CHANGES					
DATE	STEP	PROCEDURE CHANGE	By	Date	Qty	Approval Chief Eng / Prod Mgr	Approval QC Inspector

Part No: _____ **PAR #:** _____ **Fault Category:** _____ **NCR:** Yes No **DQA:** _____ **Date:** _____

Resolution: _____ **Disposition:** _____ **QA: N/C Closed:** _____ **Date:** _____

NCR:		WORK ORDER NON-CONFORMANCE (NCR)						
DATE	STEP	Description of NC Section A	Corrective Action Section B			Verification Section C	Approval Chief Eng	Approval QC Inspector
			Initial Chief Eng	Action Description Chief Eng	Sign & Date			

NOTE: Date & initial all entries

H:\fFORMS\Quality Assurance\approved QA\NCRWO RevE

Picklist Print

Thursday, June 30, 2011 11:40:49 AM

2

Work Order ID: 71385

Parent Item: D350-591-113

Parent Item Name: Heli-Access-Step, Short

Start Date: 6/30/2011 **Required Date:** 7/5/2011

Start Qty: 10.00 **Required Qty:** 10.00

Comments: IPP Rev:H□04.11.09□Reformat□KJ/JLM□ IPP Rev:E as per ECN10-586 10.06.18 DD verf:EC

Component Item ID/ Item Name	Replacement Item ID	Mfg/ Purch	Bin Item	Primary Location	Last Location	Route Seq ID	Unit of Measure	Qty on Hand	Qty per Kit	Total Qty	Qty Issued	Date Issued	Status
D2244-116 Step Extrusion		Manufactured	No			110	Each	123.0000	1	10			
				Location		Loc Qty		Loc Code					
				HALL		93							
					60307	93							
				WA		30							
					60307	30				10			
D2275 Bushing		Manufactured	No			130	Each	11.0000	1	10			
				Location		Loc Qty		Loc Code					
				WA015		11							
					27755	11				10			
D2673-34 End Plate		Manufactured	No			130	Each	99.0000	2	20			
				Location		Loc Qty		Loc Code					
				WA		76							
					69534	76				10 + 10			
				WA015		23							
					59690	23							
D2582 Step Leg Assembly		Manufactured	No			170	Each	0.0000	1	10			

11.07.11

11.07.14

11.08.10

11.08.04 B71386-10

Dart Aerospace Ltd

W/O:		WORK ORDER CHANGES					
DATE	STEP	PROCEDURE CHANGE	By	Date	Qty	Approval Chief Eng / Prod Mgr	Approval QC Inspector

Part No: _____ **PAR #:** _____ **Fault Category:** _____ **NCR:** Yes No **DQA:** _____ **Date:** _____

Resolution: _____ **Disposition:** _____ **QA: N/C Closed:** _____ **Date:** _____

NCR:		WORK ORDER NON-CONFORMANCE (NCR)						
DATE	STEP	Description of NC Section A	Corrective Action Section B			Verification Section C	Approval Chief Eng	Approval QC Inspector
			Initial Chief Eng	Action Description Chief Eng	Sign & Date			

NOTE: Date & initial all entries

H:\fFORMS\Quality Assurance\approved QA\NCRWO RevE

Picklist Print

Thursday, June 30, 2011 11:40:50 AM

2

Work Order ID: 71385

Parent Item: D350-591-113

Parent Item Name: Heli-Access-Step, Short

Start Date: 6/30/2011 **Required Date:** 7/5/2011

Start Qty: 10.00 **Required Qty:** 10.00

MS20600-AD4W3 Cherry Rivets	Purchased	No	170	Each	931.0000	16	160	11·08·10

Location	Loc Qty	Loc Code	
ST321	798		
111636	114		64
117505	498		
117601	186		
WA018	133		
107939	133		96

S +10 K591-113 CHUTOC Short Step Instln Kit	Manufactured	No	240	Each	0.0000	1	10	72115 11/8/12 (10)

Dart Aerospace Ltd

W/O:		WORK ORDER CHANGES					
DATE	STEP	PROCEDURE CHANGE	By	Date	Qty	Approval Chief Eng / Prod Mgr	Approval QC Inspector

Part No: _____ **PAR #:** _____ **Fault Category:** _____ **NCR:** Yes No **DQA:** _____ **Date:** _____

Resolution: _____ **Disposition:** _____ **QA: N/C Closed:** _____ **Date:** _____

NCR:		WORK ORDER NON-CONFORMANCE (NCR)						
DATE	STEP	Description of NC Section A	Corrective Action Section B			Verification Section C	Approval Chief Eng	Approval QC Inspector
			Initial Chief Eng	Action Description Chief Eng	Sign & Date			

NOTE: Date & initial all entries

H:\FORMS\Quality Assurance\approved QA\NCRWO RevE

DESIGN	DRAWN BY	DART AEROSPACE LTD HAWKESBURY, ONTARIO, CANADA
KE	PH	
CHECKED	APPROVED	DRAWING NO. REV. D
		D2310 SHEET 1 OF 2
DATE		TITLE SCALE
05.11.14		HIGH SHORT STEP ASSEMBLY NTS

A	94.11.10	NEW ISSUE
B	97.05.22	END CAPS CHANGED
C	97.07.23	ADDED BUSHING AND FACING INFO
D	05.11.14	UPDATE FINISHING NOTE

D2310 HIGH SHORT STEP ASSEMBLY PARTS LIST

Part No.	Description	QTY
D2310	**High Short Step Assembly**	**X**
D2244-62.0	STEP EXTRUSION*	1
D2275	BUSHING	1
D2582	STEP LEG ASSEMBLY	1
D2673-34	STEP END PLATE	2
MS20600AD4W3	Rivets	16

*cut per drawing

SHOP COPY
RETURN TO
ENGINEERING
UNCONTROLLED COPY
SUBJECT TO AMENDMENT
WITHOUT NOTICE
WORK ORDER
NO. 71385

PL 11 06 30

RELEASED
05.11.28

Copyright © 1994 by DART AEROSPACE LTD
THIS DOCUMENT IS PRIVATE AND CONFIDENTIAL AND IS SUPPLIED ON THE EXPRESS CONDITION THAT IT IS NOT TO BE USED FOR ANY PURPOSE OR COPIED OR COMMUNICATED TO ANY OTHER PERSON WITHOUT WRITTEN PERMISSION FROM DART AEROSPACE LTD.

Dart Aerospace Ltd

W/O:		WORK ORDER CHANGES					
DATE	STEP	PROCEDURE CHANGE	By	Date	Qty	Approval Chief Eng / Prod Mgr	Approval QC Inspector

Part No: _____ **PAR #:** _____ **Fault Category:** _____ **NCR:** Yes No **DQA:** _____ **Date:** _____

Resolution: _____ **Disposition:** _____ **QA: N/C Closed:** _____ **Date:** _____

NCR:		WORK ORDER NON-CONFORMANCE (NCR)						
DATE	STEP	Description of NC Section A	Corrective Action Section B			Verification Section C	Approval Chief Eng	Approval QC Inspector
			Initial Chief Eng	Action Description Chief Eng	Sign & Date			

NOTE: Date & initial all entries

H:\fFORMS\Quality Assurance\approved QA\NCRWO RevE

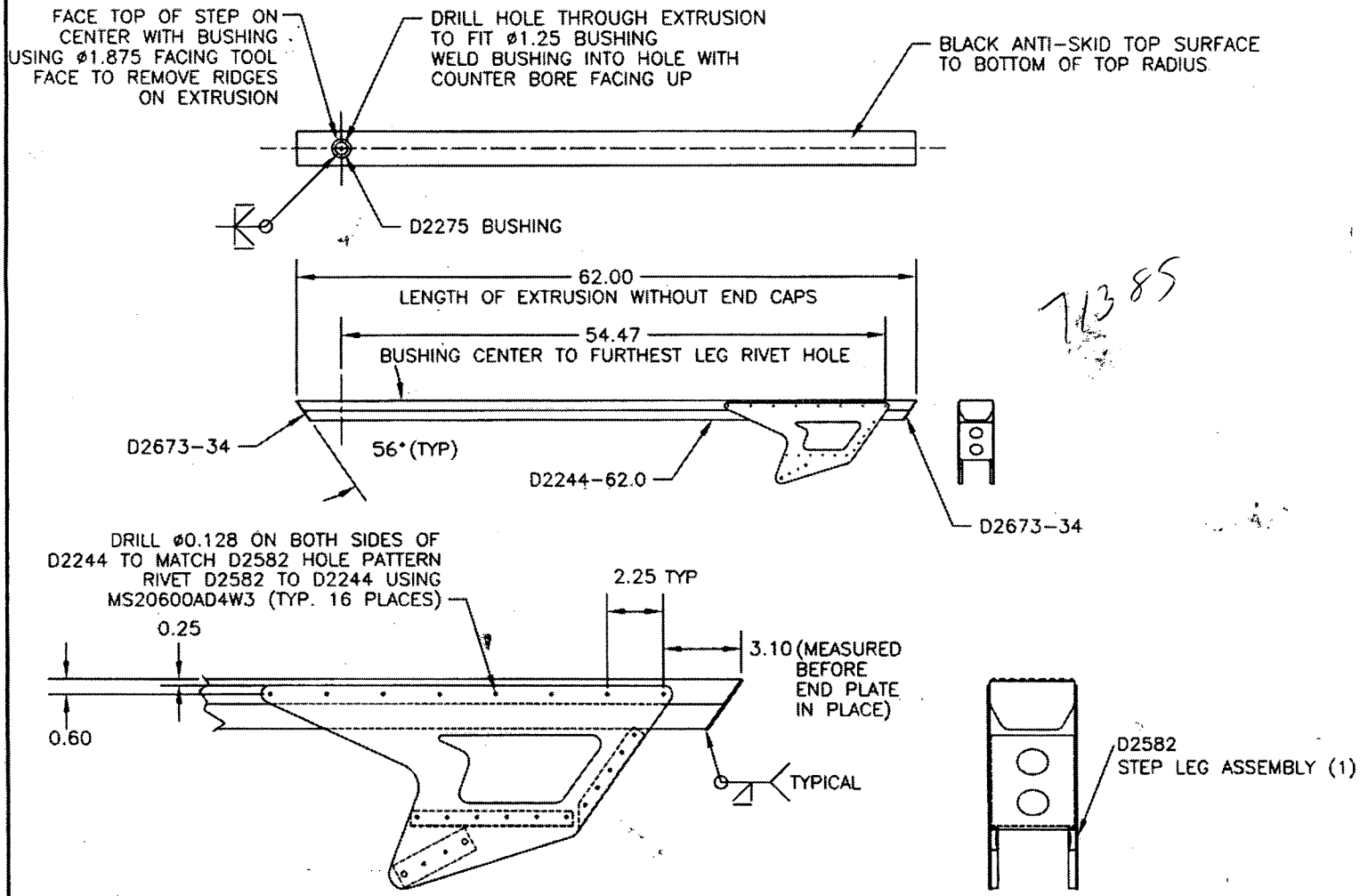

STEP LEG DETAIL

D2310 HIGH SHORT STEP ASSEMBLY

1) MAKE FROM D2244 STEP EXTRUSION
2) WELD PER DART QSI 004
3) FINISH: CHEMICAL CONVERSION COAT PER DART QSI 005 4.1
   POWDER COAT ASSEMBLY WHITE (4.3.5.1) PER DART QSI 005 4.3
   BLACK ANTI-SKID PAINT PER DART QSI 005 4.4
4) ALL DIMENSIONS ARE IN INCHES
5) TOLERANCES ARE PER DART QSI 018 UNLESS OTHERWISE NOTED

RELEASED 05.11.28

DESIGN	DRAWN BY	DART AEROSPACE LTD HAWKESBURY, ONTARIO, CANADA
KE	PH	
CHECKED	APPROVED	DRAWING NO. D2310 REV. D
DATE 05.11.14		SHEET 2 OF 2
	TITLE HIGH SHORT STEP ASSEMBLY	SCALE NTS

Copyright © 1994 by DART AEROSPACE LTD
THIS DOCUMENT IS PRIVATE AND CONFIDENTIAL AND IS SUPPLIED ON THE EXPRESS CONDITION THAT IT IS NOT TO BE USED FOR ANY PURPOSE OR COPIED OR COMMUNICATED TO ANY OTHER PERSON WITHOUT WRITTEN PERMISSION FROM DART AEROSPACE LTD.

Dart Aerospace Ltd

W/O:		WORK ORDER CHANGES					
DATE	STEP	PROCEDURE CHANGE	By	Date	Qty	Approval Chief Eng / Prod Mgr	Approval QC Inspector

Part No: _____ **PAR #:** _____ **Fault Category:** _____ **NCR:** Yes No **DQA:** _____ **Date:** _____

Resolution: _____ **Disposition:** _____ **QA: N/C Closed:** _____ **Date:** _____

NCR:		WORK ORDER NON-CONFORMANCE (NCR)						
DATE	STEP	Description of NC Section A	Corrective Action Section B			Verification Section C	Approval Chief Eng	Approval QC Inspector
			Initial Chief Eng	Action Description Chief Eng	Sign & Date			

NOTE: Date & initial all entries

H:\fFORMS\Quality Assurance\approved QA\NCRWO RevE

DART SERVICE INSTRUCTION

TO AMEND INSTALLATION INSTRUCTIONS D350-591 REV. G
AND INSTRUCTIONS FOR CONTINUED AIRWORTHINESS ICA-D350-591 REV. 3
REF TCCA STC: SH92-6
REF FAA STC: SH967NE

PURPOSE:

TO PROVIDE AN OPTIONAL CUSHION KIT TO BE INSTALLED ON THE D350-591-111A/-113/-115/-117A/-119 *Heli-Access-Step*™ (THE D2856-400-720 ABRASION STRIP IS REPLACED WITH THE D3595-200-300 CUSHION).

CHANGE:

FOR D350-591-111A/-113/-115 @ CHG 005 (OR LATER), D350-591-117A @ CHG 003 (OR LATER) AND D350-591-119 @ CHG 004 (OR LATER), THE PARTS LIST OF INSTALLATION INSTRUCTIONS D350-591 AND INSTRUCTIONS FOR CONTINUED AIRWORTHINESS ICA-D350-591 IS AMENDED AS FOLLOWS:

QTY -111A	QTY -113	QTY -115	QTY -117A	QTY -119	Part Number	Description
X					D350-591-111A	**Heli-Access-Step™, Long Step – High Skid**
	X				D350-591-113	**Heli-Access-Step™, Short Step – High Skid**
		X			D350-591-115	**Heli-Access-Step™, Short Step – Low Skid**
			X		D350-591-117A	**Heli-Access-Step™, Pre-Flight Step**
				X	D350-591-119	**Heli-Access-Step™, Long Step – Low Skid**
	1				D2310	STEP ASSEMBLY (HIGH-SHORT)
1					D2311	STEP ASSEMBLY (HIGH-LONG)
		1			D2354	STEP ASSEMBLY (LOW-SHORT)
				1	D2355	STEP ASSEMBLY (LOW-LONG)
4	2	2	2	2	D2171	CLAMP
4	2	2	2	2	D2182B035	CUSHION
8	4	4	4	4	D2274	RADIUS BLOCK
			1		D2362-041	SUPPORT BRACKET
2	1			1	D2362-3	SUPPORT BRACKET
		1			D2362-5	SUPPORT BRACKET
2	1	1	1	1	D3595-200-300	CUSHION **(NEW)**
2	2	2		2	AN3-37A	BOLT
		4			AN4-20A	BOLT **(REPLACED, WAS AN4-16A)**
8	4			4	AN4-21A	BOLT **(REPLACED, WAS AN4-20A)**
1	1	1	4	1	AN4-22A	BOLT
4	4	4		4	NAS1149D0363J	WASHER (OR AN960JD10)
10	6	2	4	6	NAS1149D0463J	WASHER (OR AN960JD416)
		4			NAS1149D0416J	WASHER (OR AN960JD416L)
2	2	2		2	MS21042L3	NUT
9	5	5	4	5	MS21042L4	NUT

SHOP COPY
RETURN TO
ENGINEERING
UNCONTROLLED COPY
SUBJECT TO AMENDMENT
WITHOUT NOTICE
WORK ORDER
NO 71385
11-06-30

CANADA
DEPARTMENT OF TRANSPORT
AIRCRAFT CERTIFICATION
BRANCH
DAO # 01-O-01

APPROVED
BY: _____
D. SHEPHERD (DE # 02)
DATE: 10.06.08
CERT. NO.: SH92-6
ISSUE NO.: 11

REV.	DESCRIPTION	BY	DATE
A	NEW ISSUE.	JPH	10.06.08

DESIGN		**DART AEROSPACE LTD** HAWKESBURY, ONTARIO, CANADA
DRAWN		
CHECKED		DRAWING NO. REV. A
MFG. APPR.	N/A	DSI 9525 SHEET 1 OF 4
APPROVED		TITLE SCALE
DE APPR.		STEP CUSHION CHANGE NTS
DATE	10.06.08	

COPYRIGHT © 2010 BY DART AEROSPACE LTD
THIS DOCUMENT IS PRIVATE AND CONFIDENTIAL AND IS SUPPLIED ON THE EXPRESS CONDITION THAT IT IS NOT TO BE USED FOR ANY PURPOSE OR COPIED OR COMMUNICATED TO ANY OTHER PERSON WITHOUT WRITTEN PERMISSION FROM DART AEROSPACE LTD.

Dart Aerospace Ltd

W/O:		WORK ORDER CHANGES					
DATE	STEP	PROCEDURE CHANGE	By	Date	Qty	Approval Chief Eng / Prod Mgr	Approval QC Inspector

Part No: _____ **PAR #:** _____ **Fault Category:** _____ **NCR:** Yes No **DQA:** _____ **Date:** _____

Resolution: _____ **Disposition:** _____ **QA: N/C Closed:** _____ **Date:** _____

NCR:		WORK ORDER NON-CONFORMANCE (NCR)						
DATE	STEP	Description of NC Section A	Corrective Action Section B			Verification Section C	Approval Chief Eng	Approval QC Inspector
			Initial Chief Eng	Action Description Chief Eng	Sign & Date			

NOTE: Date & initial all entries

H:\fFORMS\Quality Assurance\approved QA\NCRWO RevE

THE DSI-9525-XXX KITS THAT ARE AVAILABLE FROM DART TO UPGRADE THE D350-591-111A/-113/-115 KITS @ CHG 004 (OR EARLIER), THE D350-591-117A KIT @ CHG 002 (OR EARLIER) AND THE D350-591-119 KIT @ CHG 003 (OR EARLIER) ARE AS FOLLOWS:

QTY -011	QTY -013	QTY -015	QTY -017	Part Number	Description
X				DSI-9525-011	STEP CUSHION KIT (FOR D350-591-111A)
	X			DSI-9525-013	STEP CUSHION KIT (FOR D350-591-113/-119)
		X		DSI-9525-015	STEP CUSHION KIT (FOR D350-591-115)
			X	DSI-9525-017	STEP CUSHION KIT (FOR D350-591-117A)
2	1	1	1	D3595-200-300	CUSHION
		4		AN4-20A	BOLT
8	4			AN4-21A	BOLT
			4	AN4-22A	BOLT
8	4	4	4	NAS1149D0463J	WASHER (OR AN960JD416)
8	4	4	4	MS21042L4	NUT

INSTRUCTIONS:

TO INSTALL THE D3595-200-300 CUSHION:

1. REMOVE THE STEP PER ICA-D350-591 SECTION 32.2
2. REMOVE THE D2856-400-720 ABRASION STRIP PER ICA-D350-591 SECTION 32.4
3. POSITION THE D3595-200-300 CUSHION AS INDICATED ON SHEET 3 OR 4 (AS APPLICABLE) OF THIS SERVICE INSTRUCTION.
4. REINSTALL THE STEP PER ICA-D350-591 SECTION 32.1 AS APPLICABLE USING THE NEW HARDWARE PROVIDED AS SHOWN ON SHEET 3 OR 4 (AS APPLICABLE) OF THIS SERVICE INSTRUCTION.

WEIGHT AND BALANCE:

THERE IS A NEGLIGIBLE WEIGHT INCREASE WITH THIS MODIFICATION.

71385

CANADA
DEPARTMENT OF TRANSPORT
AIRCRAFT CERTIFICATION
BRANCH
DAO # 01-O-01

APPROVED

BY: _____
D. SHEPHERD (DE # 02)

DATE: 10.06.08
CERT. NO.: SH92-6
ISSUE NO.: 11

DESIGN		**DART AEROSPACE LTD** HAWKESBURY, ONTARIO, CANADA
DRAWN		
CHECKED		DRAWING NO. REV. A
MFG. APPR.	N/A	DSI 9525 SHEET 2 OF 4
APPROVED		TITLE SCALE
DE APPR.		STEP CUSHION CHANGE NTS
DATE	10.06.08	

COPYRIGHT © 2010 BY DART AEROSPACE LTD
THIS DOCUMENT IS PRIVATE AND CONFIDENTIAL AND IS SUPPLIED ON THE EXPRESS CONDITION THAT IT IS NOT TO BE USED FOR ANY PURPOSE OR COPIED OR COMMUNICATED TO ANY OTHER PERSON WITHOUT WRITTEN PERMISSION FROM DART AEROSPACE LTD.

Dart Aerospace Ltd

W/O:		WORK ORDER CHANGES					
DATE	STEP	PROCEDURE CHANGE	By	Date	Qty	Approval Chief Eng / Prod Mgr	Approval QC Inspector

Part No: _____ **PAR #:** _____ **Fault Category:** _____ **NCR:** Yes No **DQA:** _____ **Date:** _____

Resolution: _____ **Disposition:** _____ **QA: N/C Closed:** _____ **Date:** _____

NCR:		WORK ORDER NON-CONFORMANCE (NCR)						
DATE	STEP	Description of NC Section A	Corrective Action Section B			Verification Section C	Approval Chief Eng	Approval QC Inspector
			Initial Chief Eng	Action Description Chief Eng	Sign & Date			

NOTE: Date & initial all entries

H:\fFORMS\Quality Assurance\approved QA\NCRWO RevE

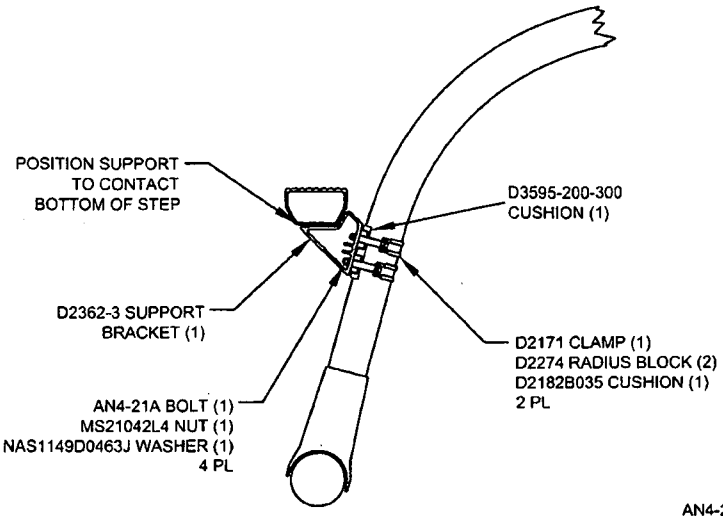

SECTION C-C: CENTER SUPPORT
(D350-591-111A ONLY)
(NOT TO SCALE)

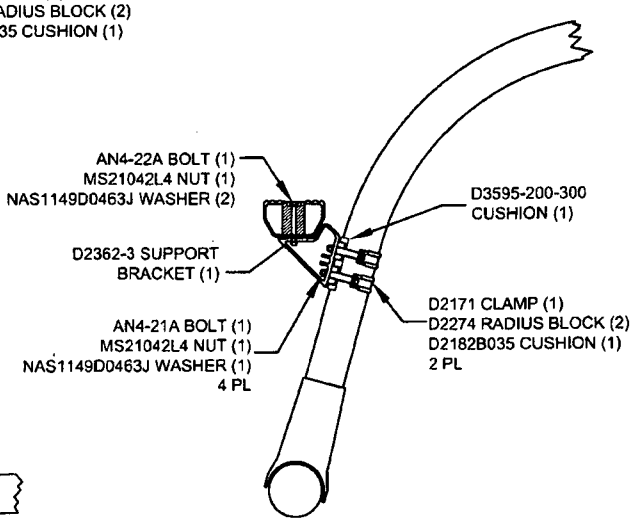

SECTION D-D: AFT ATTACHMENT
(D350-591-111A/-113/-119 ONLY)
(NOT TO SCALE)

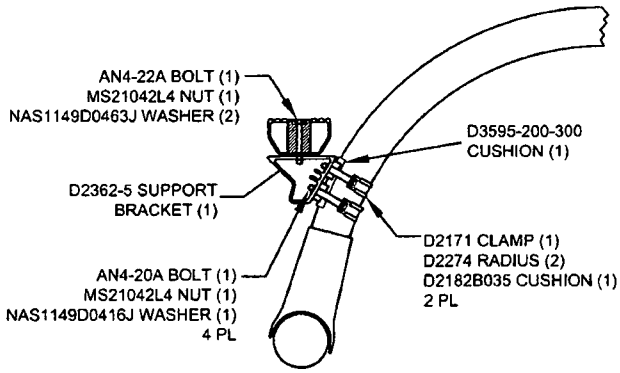

SECTION E-E: AFT ATTACHMENT
(D350-591-115 ONLY)
(NOT TO SCALE)

7385

FIGURE 32-9: Crosstube Attachment
REF ICA-D350-591
FIGURE 9: Crosstube Attachment
REF D350-591

CANADA
DEPARTMENT OF TRANSPORT
AIRCRAFT CERTIFICATION
BRANCH
DAO # 01-O-01

APPROVED
BY: _____
D. SHEPHERD (DE # 02)
DATE: 10.06.08
CERT. NO.: SH92-6
ISSUE NO.: 11

DESIGN		**DART AEROSPACE LTD** HAWKESBURY, ONTARIO, CANADA
DRAWN		
CHECKED		DRAWING NO. REV. A
MFG. APPR.	N/A	DSI 9525 SHEET 3 OF 4
APPROVED		TITLE SCALE
DE APPR.		STEP CUSHION CHANGE NTS
DATE	10.06.08	

COPYRIGHT © 2010 BY DART AEROSPACE LTD
THIS DOCUMENT IS PRIVATE AND CONFIDENTIAL AND IS SUPPLIED ON THE EXPRESS CONDITION THAT IT IS NOT TO BE USED FOR ANY PURPOSE OR COPIED OR COMMUNICATED TO ANY OTHER PERSON WITHOUT WRITTEN PERMISSION FROM DART AEROSPACE LTD.

Dart Aerospace Ltd

W/O:		WORK ORDER CHANGES					
DATE	STEP	PROCEDURE CHANGE	By	Date	Qty	Approval Chief Eng / Prod Mgr	Approval QC Inspector

Part No: _____ **PAR #:** _____ **Fault Category:** _____ **NCR:** Yes No **DQA:** _____ **Date:** _____

Resolution: _____ **Disposition:** _____ **QA: N/C Closed:** _____ **Date:** _____

NCR:		WORK ORDER NON-CONFORMANCE (NCR)						
DATE	STEP	Description of NC Section A	Corrective Action Section B			Verification Section C	Approval Chief Eng	Approval QC Inspector
			Initial Chief Eng	Action Description Chief Eng	Sign & Date			

NOTE: Date & initial all entries

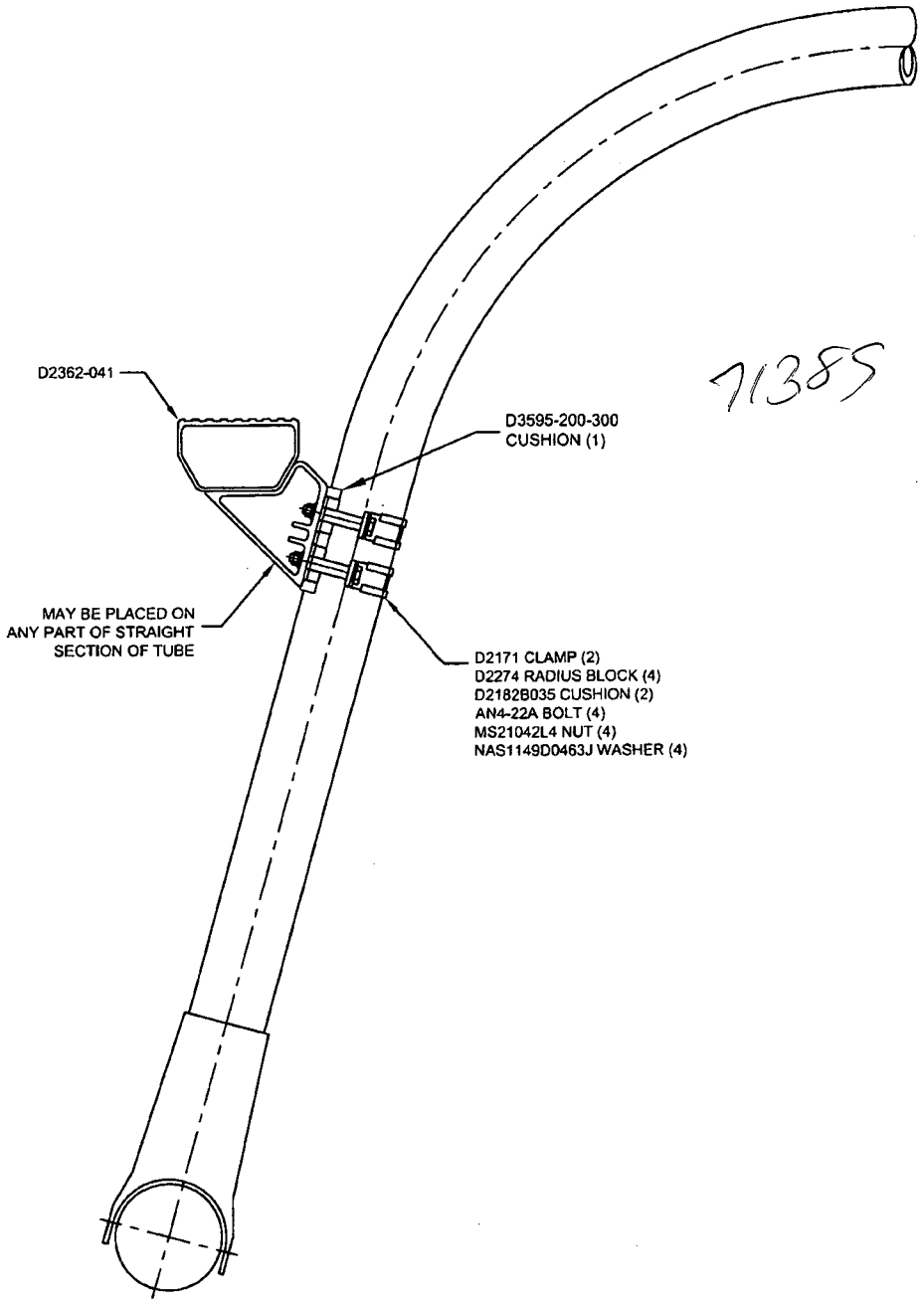

FIGURE 32-10: D350-591-117A ***Heli-Access-Step***™, Pre-Flight Step
REF ICA-D350-591

FIGURE 10: D350-591-117A ***Heli-Access-Step***™, Pre-Flight Step
REF D350-591

CANADA
DEPARTMENT OF TRANSPORT
AIRCRAFT CERTIFICATION
BRANCH
DAO # 01-O-01

APPROVED

BY: _____
D. SHEPHERD (DE # 02)

DATE: 10.06.08
CERT. NO.: SH92-6
ISSUE NO.: 11

DESIGN		**DART AEROSPACE LTD** HAWKESBURY, ONTARIO, CANADA
DRAWN		
CHECKED		DRAWING NO. REV. A
MFG. APPR.	N/A	DSI 9525 SHEET 4 OF 4
APPROVED		TITLE SCALE
DE APPR.		STEP CUSHION CHANGE NTS
DATE	10.06.08	

COPYRIGHT © 2010 BY DART AEROSPACE LTD
THIS DOCUMENT IS PRIVATE AND CONFIDENTIAL AND IS SUPPLIED ON THE EXPRESS CONDITION THAT IT IS NOT TO BE USED FOR ANY PURPOSE OR COPIED OR COMMUNICATED TO ANY OTHER PERSON WITHOUT WRITTEN PERMISSION FROM DART AEROSPACE LTD.

Dart Aerospace Ltd

W/O:		WORK ORDER CHANGES					
DATE	STEP	PROCEDURE CHANGE	By	Date	Qty	Approval Chief Eng / Prod Mgr	Approval QC Inspector

Part No: _____ **PAR #:** _____ **Fault Category:** _____ **NCR:** Yes No **DQA:** _____ **Date:** _____

Resolution: _____ **Disposition:** _____ **QA: N/C Closed:** _____ **Date:** _____

NCR:		WORK ORDER NON-CONFORMANCE (NCR)						
DATE	STEP	Description of NC Section A	Corrective Action Section B			Verification Section C	Approval Chief Eng	Approval QC Inspector
			Initial Chief Eng	Action Description Chief Eng	Sign & Date			

NOTE: Date & initial all entries